2-3 Thyristors (SCRs)

In some applications such as battery chargers and dc motor drives it is necessary for dc voltage to be controllable. The ac to controlled-dc conversion is accomplished by means of thyristors.

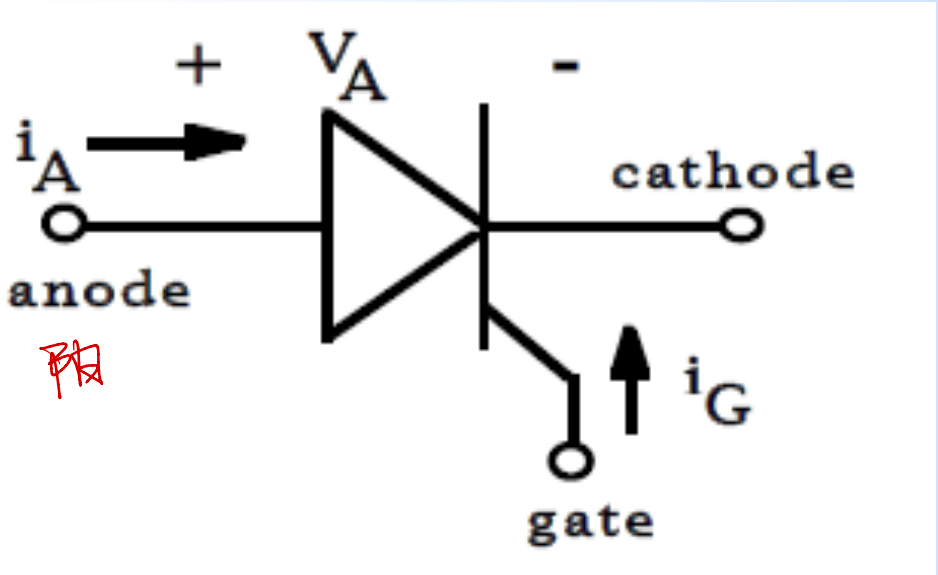

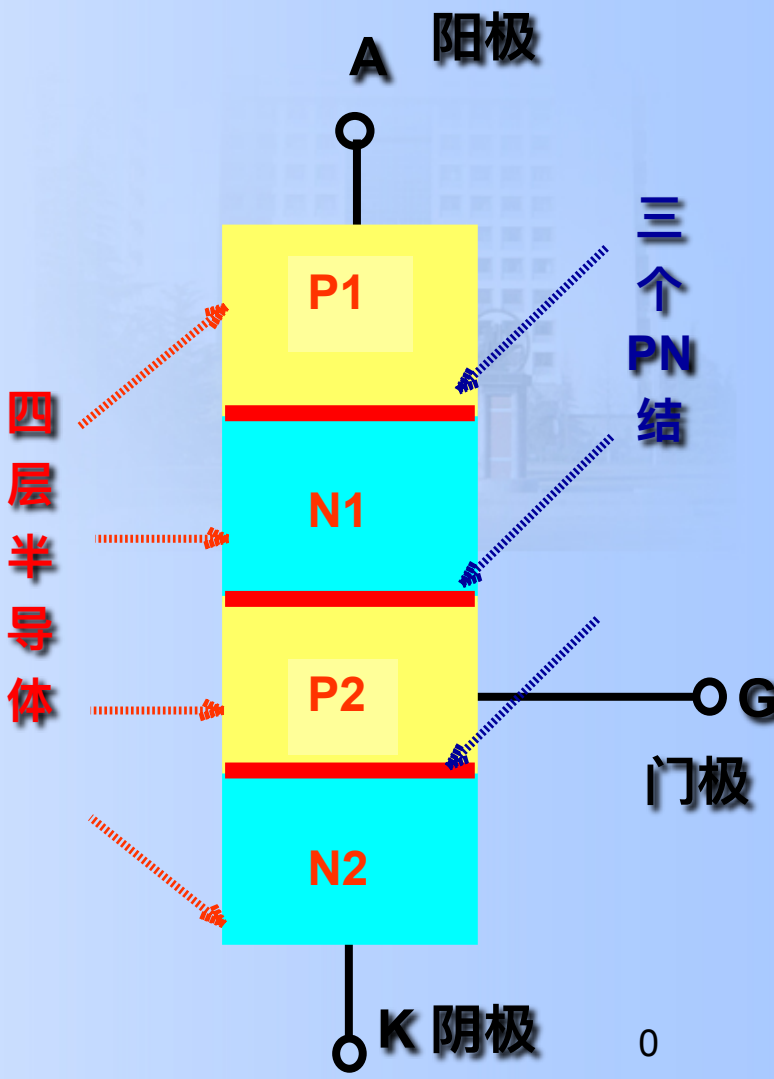

Thyristors, usually be called “Silicon Controlled Rectifiers (SCR)” .

Thyristor Opened the power electronics era

1956, invention, Bell Laboratories

1957, development of the 1st product, GE

1958, 1st commercialized product, GE

Thyristor replaced vacuum devices in almost every power processing area.

Still used in very high power levels such as utility applications. Thyristor still has the highest power-handling capability.

1 Appearance（外形）

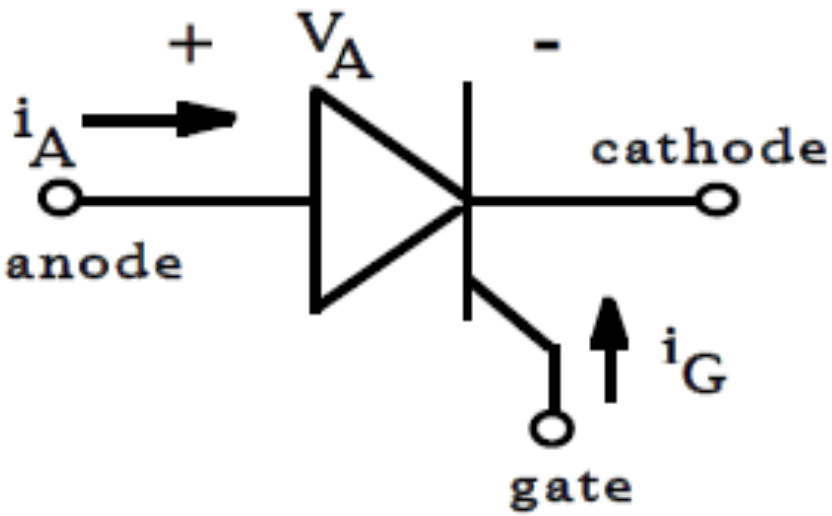

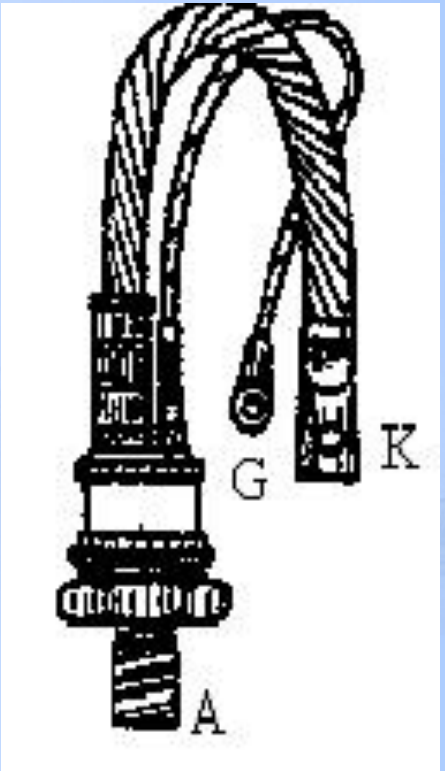

www.hc360.com

ZP500A
KP300A
ZP100A
alibaba.com.cn

JINGLAI
MTC110A16
NO:010426005
上海品来整流器有限公司
CR1
CR2
A1K2
K1
A2
K2 G2
K1 G1

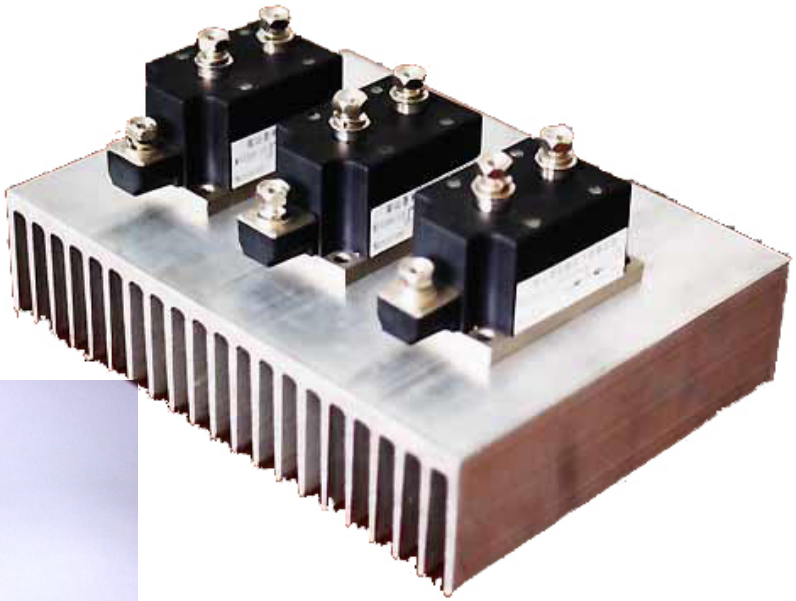

SENREXPAK
MTC300-16
NO:011024003
上海晶来整流器有限公司

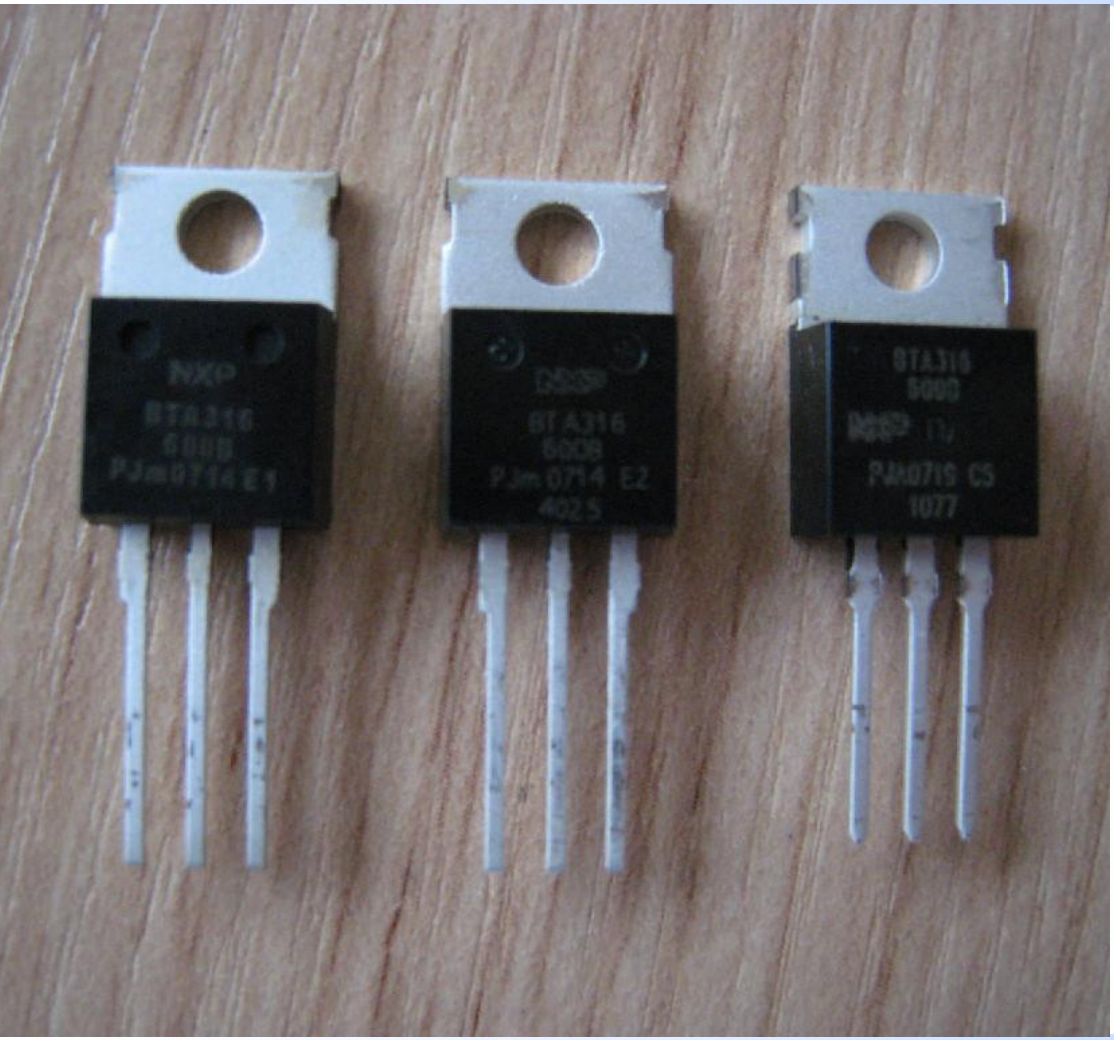
NXP
BTA316
600B
BTA316
600B
BTA316
600B

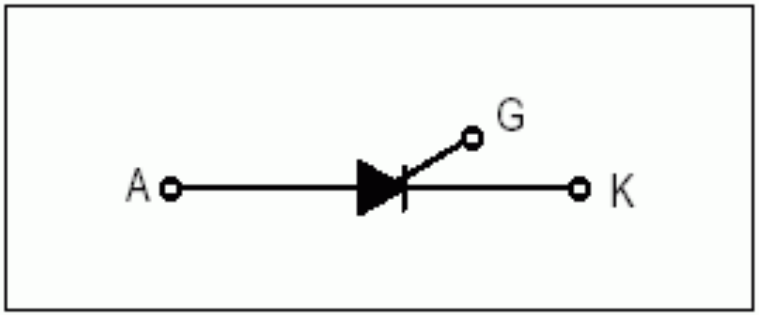
G
A
K

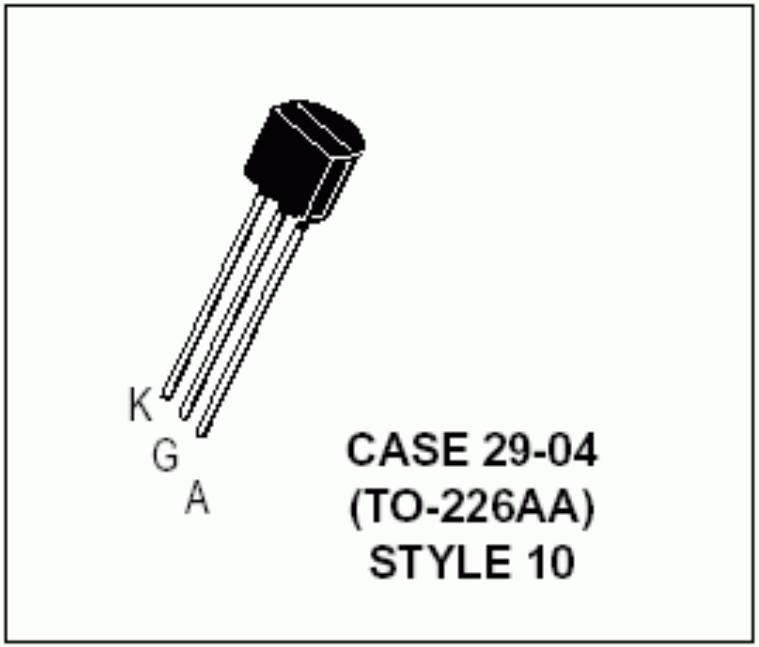
K
G
A
CASE 29-04
(TO-226AA)
STYLE 10

2 Physics of device operation (器件工作机理)

(1) Reverse-blocking state（反向阻断状态）：

When a reverse (vAK<0) voltage is applied, the flow of current is blocked by the junctions J1 and J3.

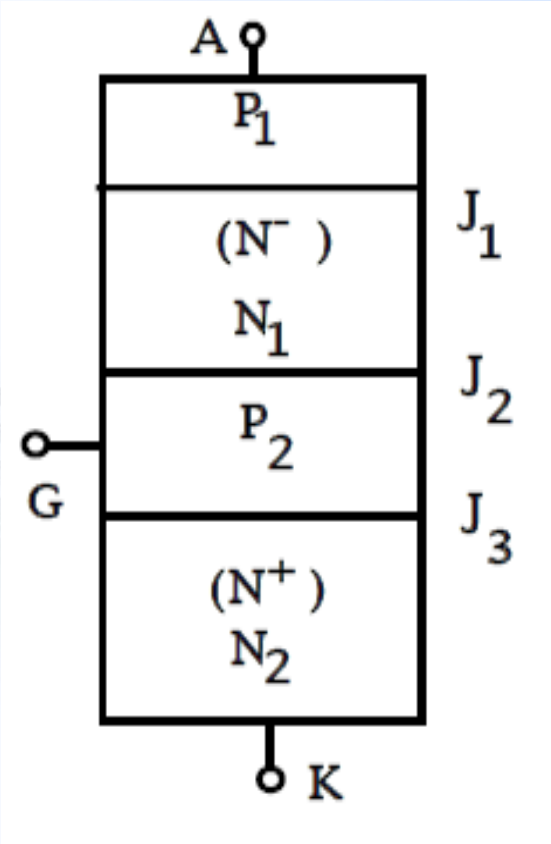

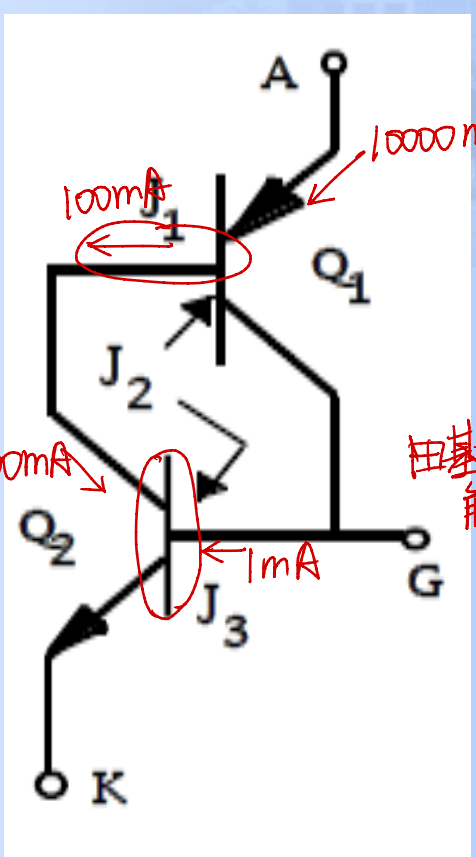

(2) Forward-blocking state (正向阻断状态):

When a forward (vAK>0) voltage is applied, the flow of current is blocked by the junctions J2.

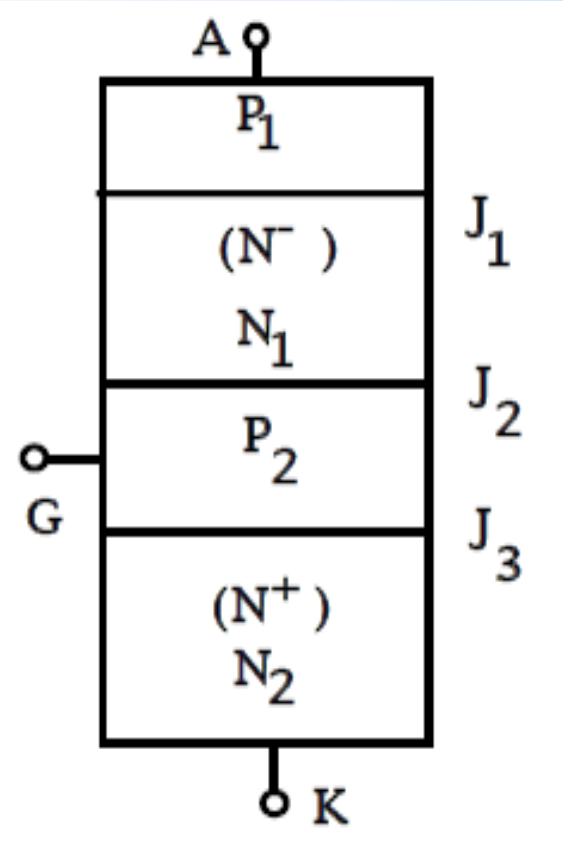

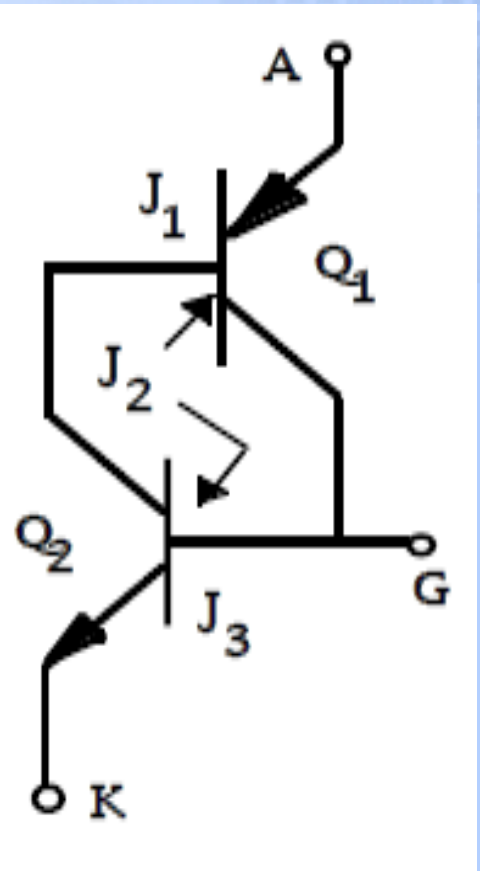

(3) Turn on (开通):

When a forward (vAK>0) voltage is applied, and a pulse of positive voltage (vGK) is applied to gate with respect to the cathode, the thyristor is in its *on state*. **Once the device begins to conduct**, it is **latched** on and the gate current can be removed.

iG →iB2↑→iC2↑→iC1 (iA)↑

↑————————————↓

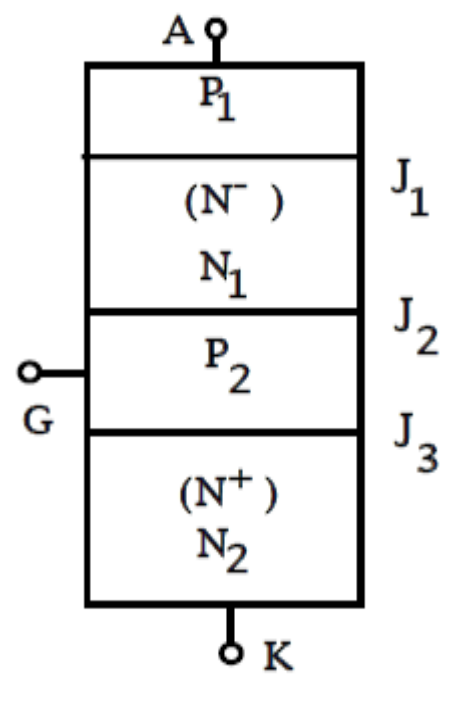

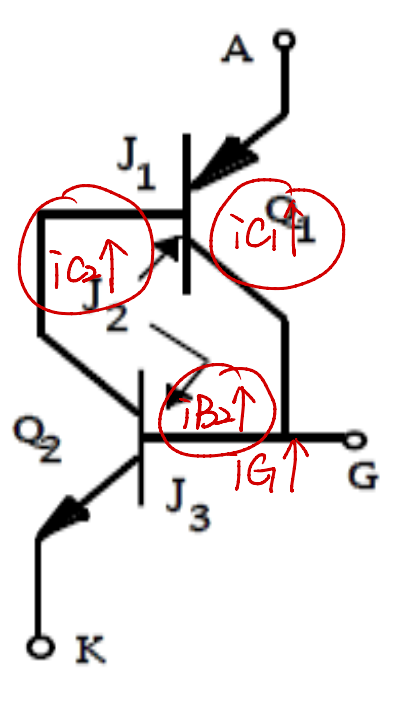

(4) Turn off (关断):

The thyristor cannot be turned off by the gate.

Only when the anode current tries to go negative, does the thyristor turn off and the current go to zero.

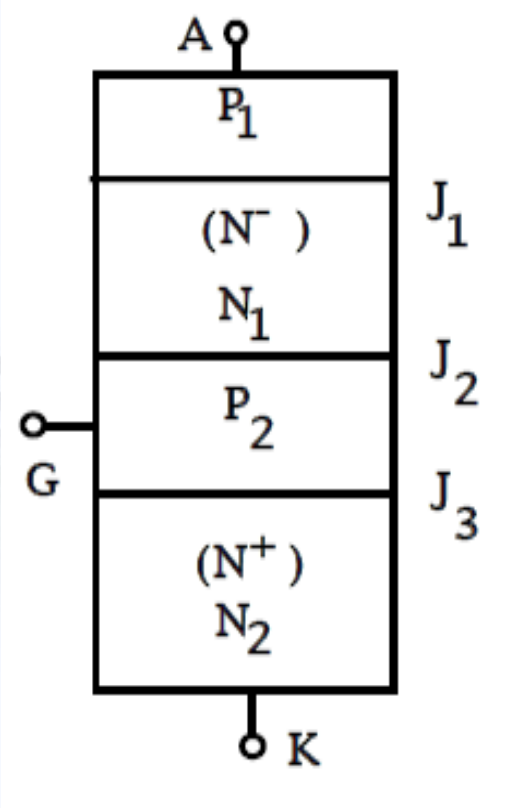

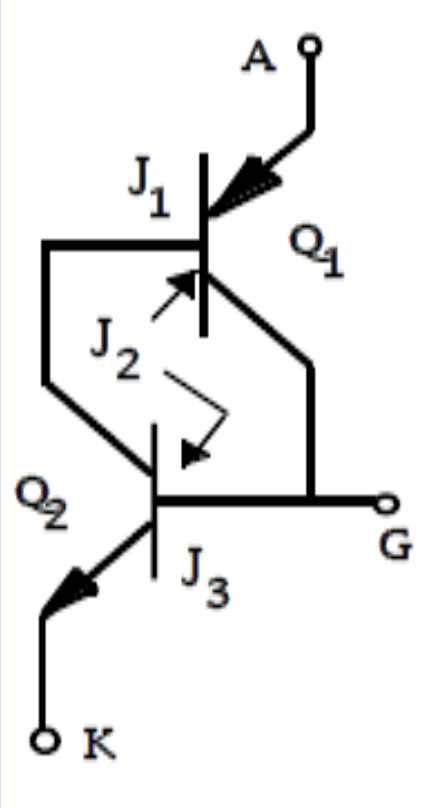

3 Static characteristics of thyristor (晶闸管的静态特性)

- **Blocking** when reverse biased, no matter if there is gate current applied
- **Conducting** only when forward biased and there is ***triggering current*** (or called ***firing current***)(触发电流) applied to the gate

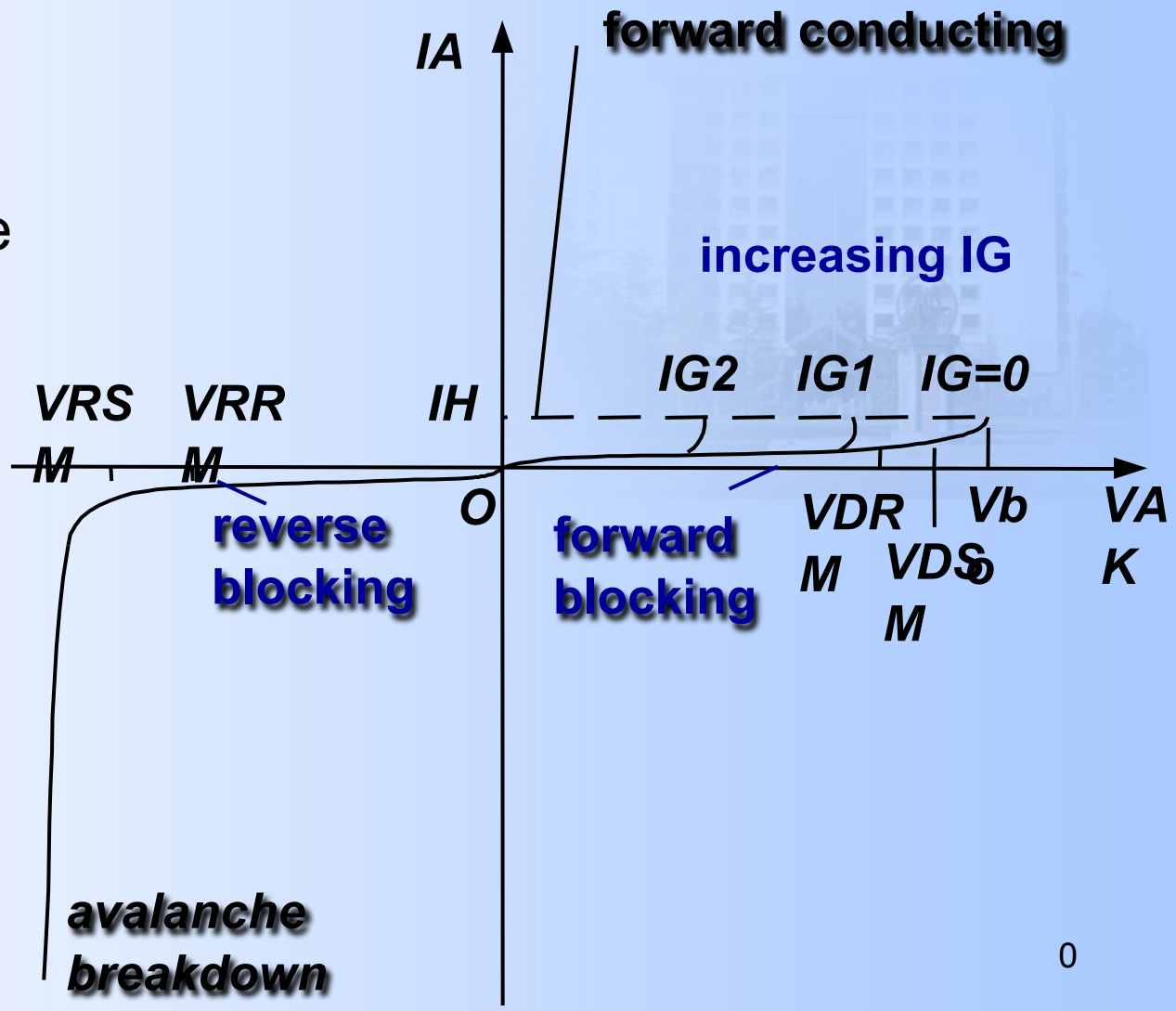

- **Once triggered on**, will be latched on conducting even when the gate current is no longer applied.
- **Turning off**: decreasing current to be near zero with the effect of external power circuit.

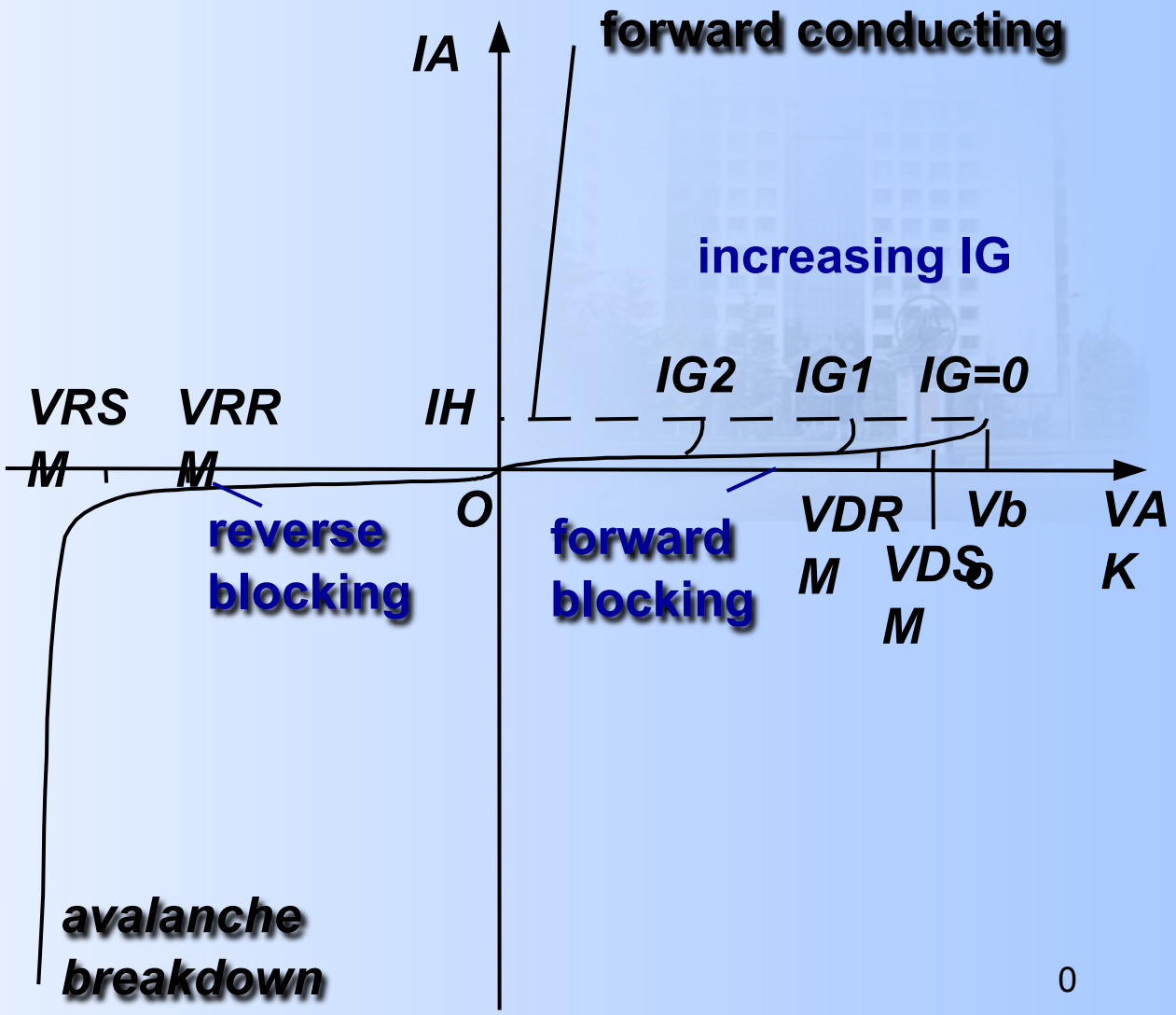

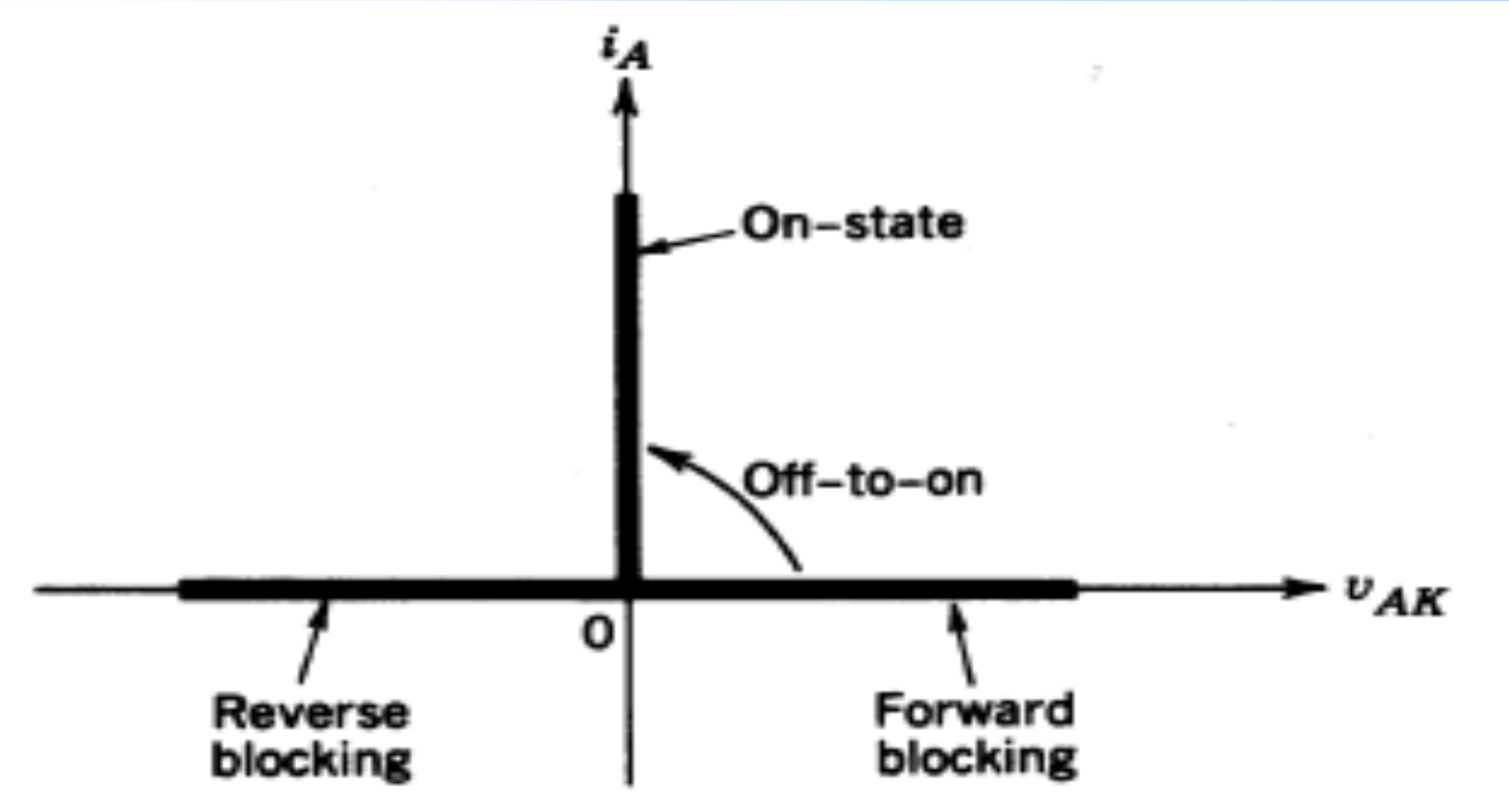

Idealized characteristics

4 Specifications of thyristor (晶闸管的主要参数)

- *Peak repetitive forward blocking voltage (断态正向重复峰值电压)*---VDRM；define: VDRM =90%VDSM （不重复）
- *Peak repetitive reverse blocking voltage (反向重复峰值电压)* ---VRRM；define: VRRM =90% VRSM （不重复）
- define: *Rated Voltage* VR =MIN(VDRM, VRRM) ☆
- *Peak on-state voltage drop (通态(峰值)电压)*---VTM
- *Rated current IR* or *Average on-state current (通态平均电流)*---IAV ☆
- Peak forward *surge current (浪涌电流)*---ITSM

Supplemental material

➢Supplemental material---*Average on-state current (通态平均电流)*---IT(AV)

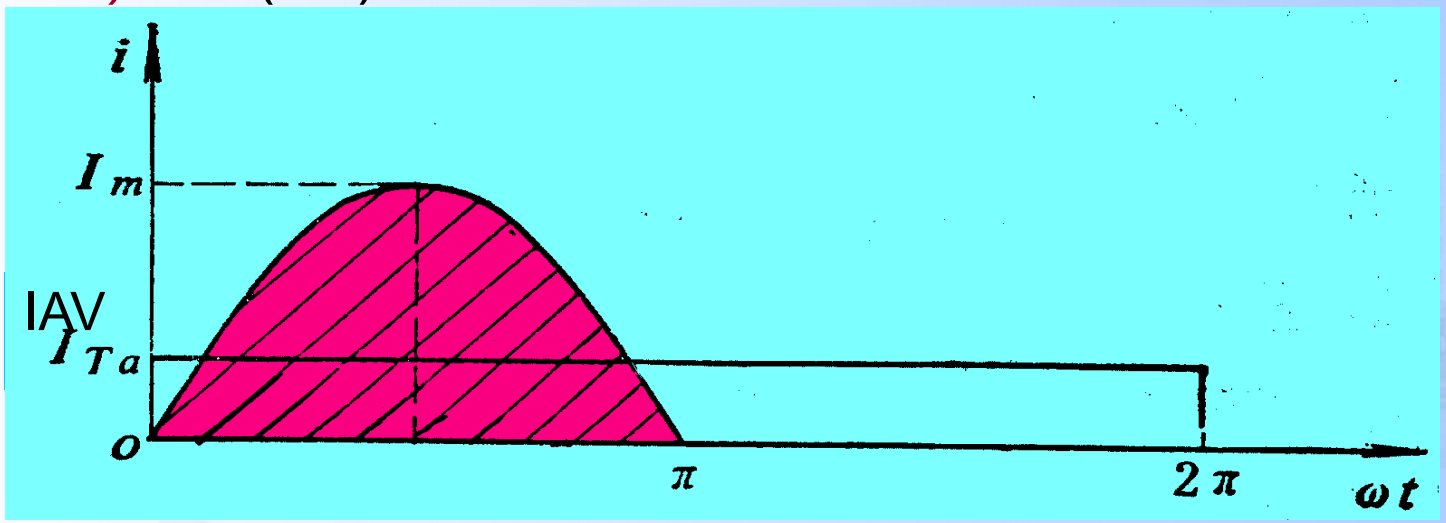

$$I_{AV} = \frac{1}{2\pi}\int_0^{\pi} I_m \sin\omega t d\omega t = \frac{I_m}{\pi}$$

$$rms \qquad I = \sqrt{\frac{1}{2\pi}\int_0^{\pi} (I_m \sin\omega t)^2 d(\omega t)} = \frac{I_m}{2}$$

$$I_{AV} = \frac{2}{\pi} I = \frac{I}{1.57}$$

Supplemental material

Consideration: The current waveform flowing through a SCR is showed as below, Im=300A. What is the rated current value of the SCR?

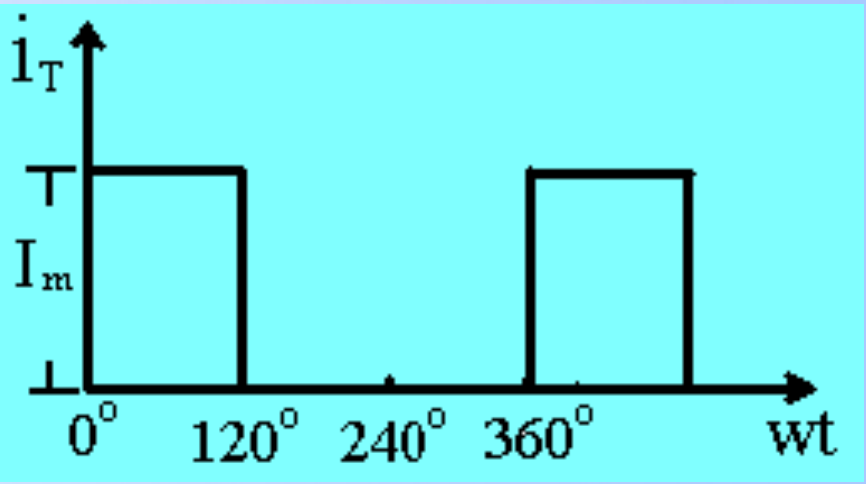

Solution 1:

平均值

$$I_{AV} = \frac{120 I_m}{360} = 100A$$

Solution 2:

$$I = \sqrt{\frac{1}{2\pi}\int_0^{2\pi/3} (I_m)^2 d(\omega t)} = \frac{I_m}{\sqrt{3}} = 100\sqrt{3}A$$

$$I_{AV} = \frac{I}{1.57} = 110A$$

Which one is right?

Consideration：

在晶闸管中流过任意形状的电流情况下，应根据哪个电流来选择晶闸管？（如何计算额定电流？）

SCR承受过电流的能力很强，因此其承受电流能力的大小不是指瞬时承受电流的能力，而是指长时（数十毫秒）承受电流的能力，这种能力受制于管子的损耗，即受制于管子的有效值电流，因此当SCR中流过任意形状电流时应按实际电流与最大工频正弦半波电流的有效值相等的原则来选取晶闸管。

在环境温度为40□C和规定的冷却状态下，用稳定结温不超过额定结温所允许流过的最大工频正弦半波电流的平均值来标称其额定电流的参数。使用时应按有效值相等的原则来选取晶闸管。

Supplemental material

☆ How to Calculate the rated current value of the SCR

① Find the rms value of the current through a SCR.

$$I = \sqrt{\frac{1}{\beta - \alpha}\int_{\alpha}^{\beta} i^2(\omega t)d(\omega t)}$$

② Find the average on state current through a SCR.

$$I_{AV} = (1.5 \sim 2)\frac{I}{1.57}$$

Example 1: The current waveform flowing through a SCR is showed as right, Im=300A. Calculate (or Select , or Find) the rated current value of the SCR.

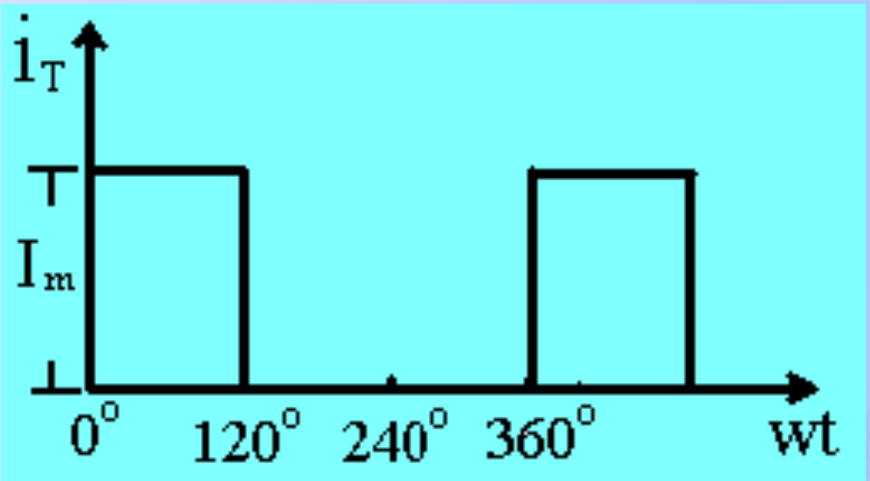

Solution:

$$I=\sqrt{\frac{1}{2\pi}\int_0^{2\pi/3}(I_m)^2 d(\omega t)}=\frac{I_m}{\sqrt{3}}=100\sqrt{3}A$$

$$I_{AV}=(1.5\sim 2)\frac{I}{1.57}=165\sim 220A$$

4 Specifications of thyristor (continous)

- *Holding current (维持电流)*---IH (the minimum anode current to main the thyristor in the on-state). **Junction temperature ↑→IH↓**
- *Latching current (擎住电流)*---IL (the minimum anode current required to maintain the thyristor in the on-state immediately after a thyristor has been turned on and the gate signal has been removed). **For the same thyristor: IL≈(2~4) IH**

The forward anode current of a thyristor must be more than its latching current to latch into the conduction state; otherwise, the device reverts to the blocking condition as the anode to cathode voltage falls.

Example 2: A SCR circuit is shown below. When K open, the measured output voltage value Vd is incorrect. When k is closed, Vd is back to normality. Why?

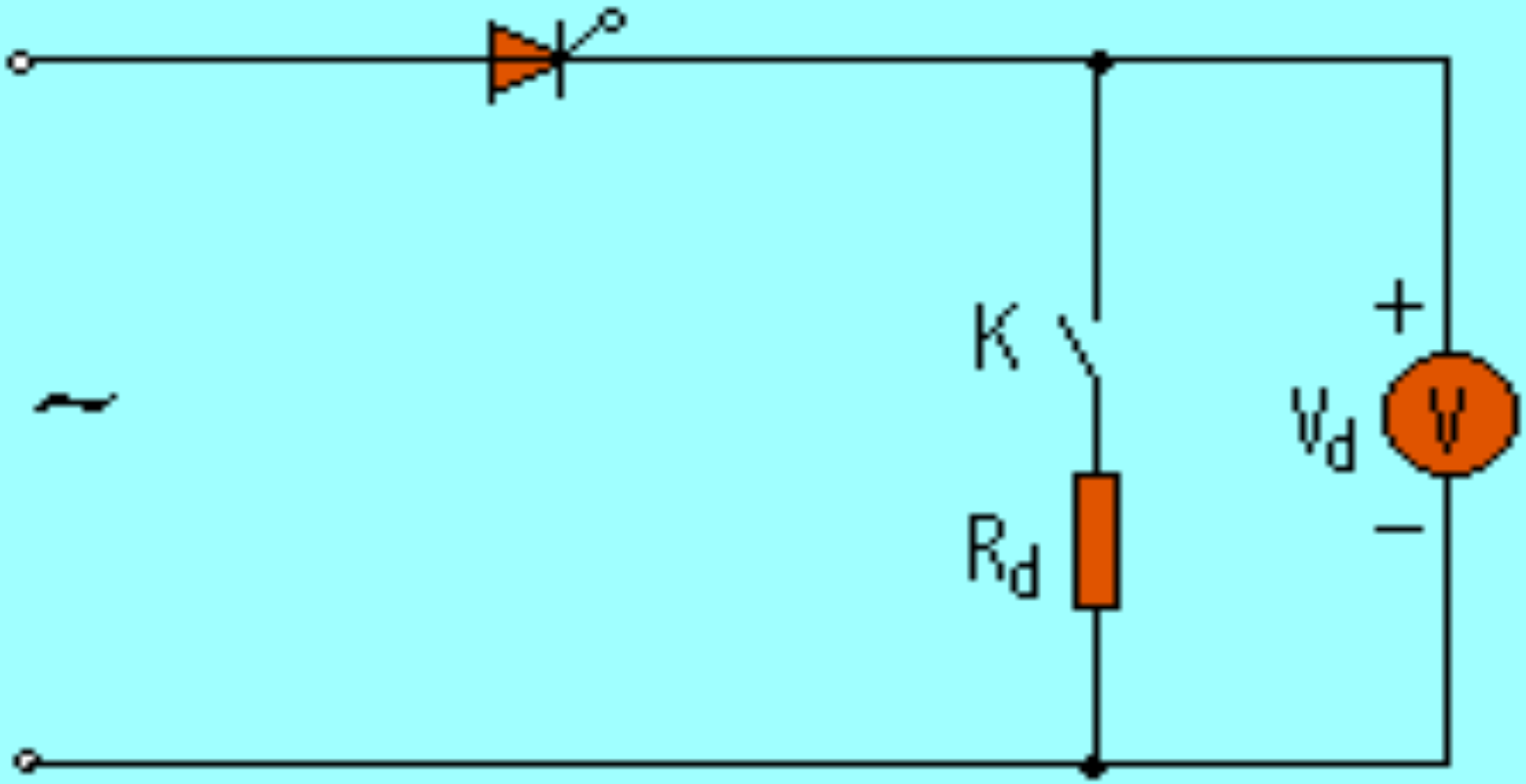

4 Specifications of thyristor (continous)

- Rate of rise of the current at turn-on---di/dt

☆ di/dt must be less than the rated value. If di/dt exceeds the rated value, the device may be damaged.

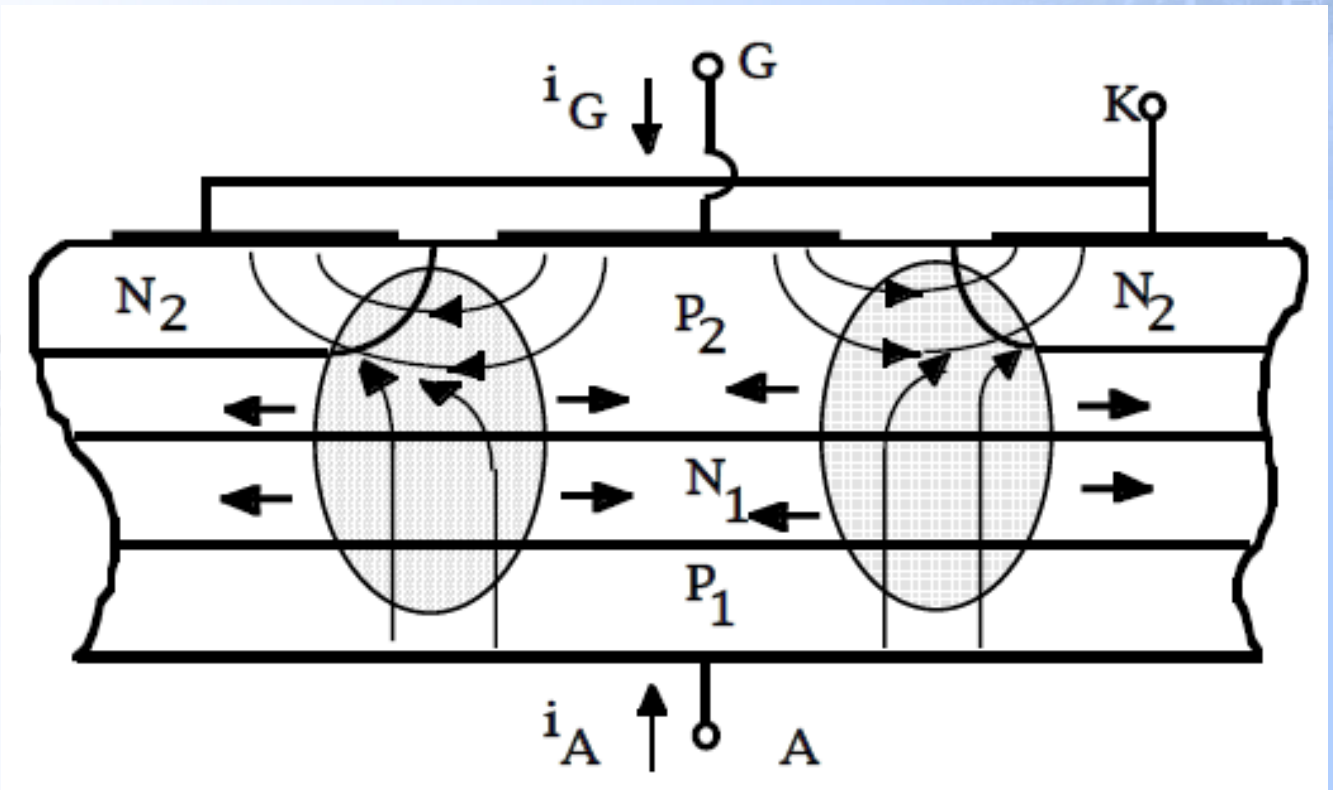

- Rate of rise of the voltage at turn-off---dv/dt

If a thyristor is in a blocking state, a rapidly rising voltage applied across the device can cause high current flow through its internal junction capacitor. This current may be high enough to damage the device.

Thus, the applied dv/dt must be less than the rated value. ☆

- *Turn-off time interval*

tq---the minimum value of time interval between the instant when the on-state current has decreased to zero and the instant when the thyristor is capable of withstanding forward voltage without turning on.

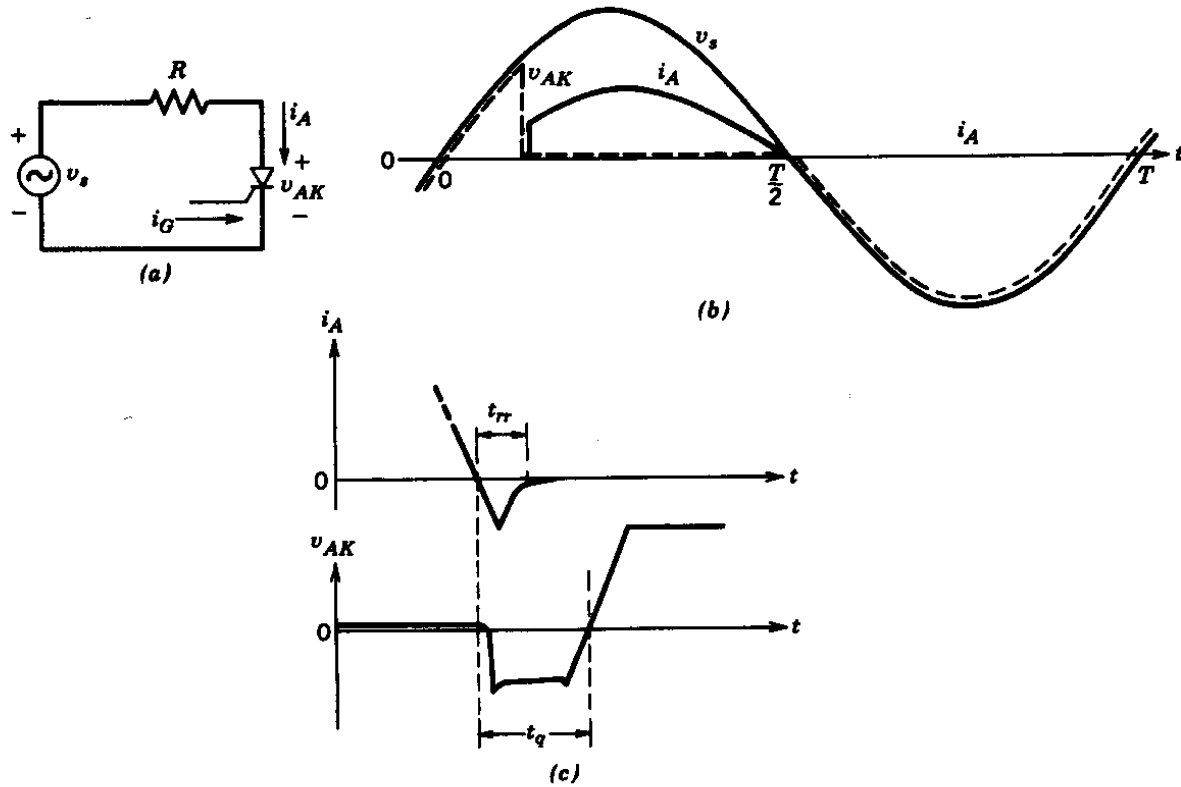

Figure 2-4 Thyristor: (*a*) circuit, (*b*) waveforms, (*c*) turn-off time interval t_q.

- For successful turn-off, reverse voltage required for an interval greater than the *turn-off interval* tq.

开通过程

- 延迟时间*td* (0.5~1.5μs)
- 上升时间*tr* (0.5~3μs)
- 开通时间*tgt*以上两者之和，*tgt*=*td*+ *tr*

关断过程

- 反向阻断恢复时间trr
- 正向阻断恢复时间tgr
- 关断时间tq以上两者之和tq=trr+tgr
- 普通晶闸管的关断时间约几百微秒。

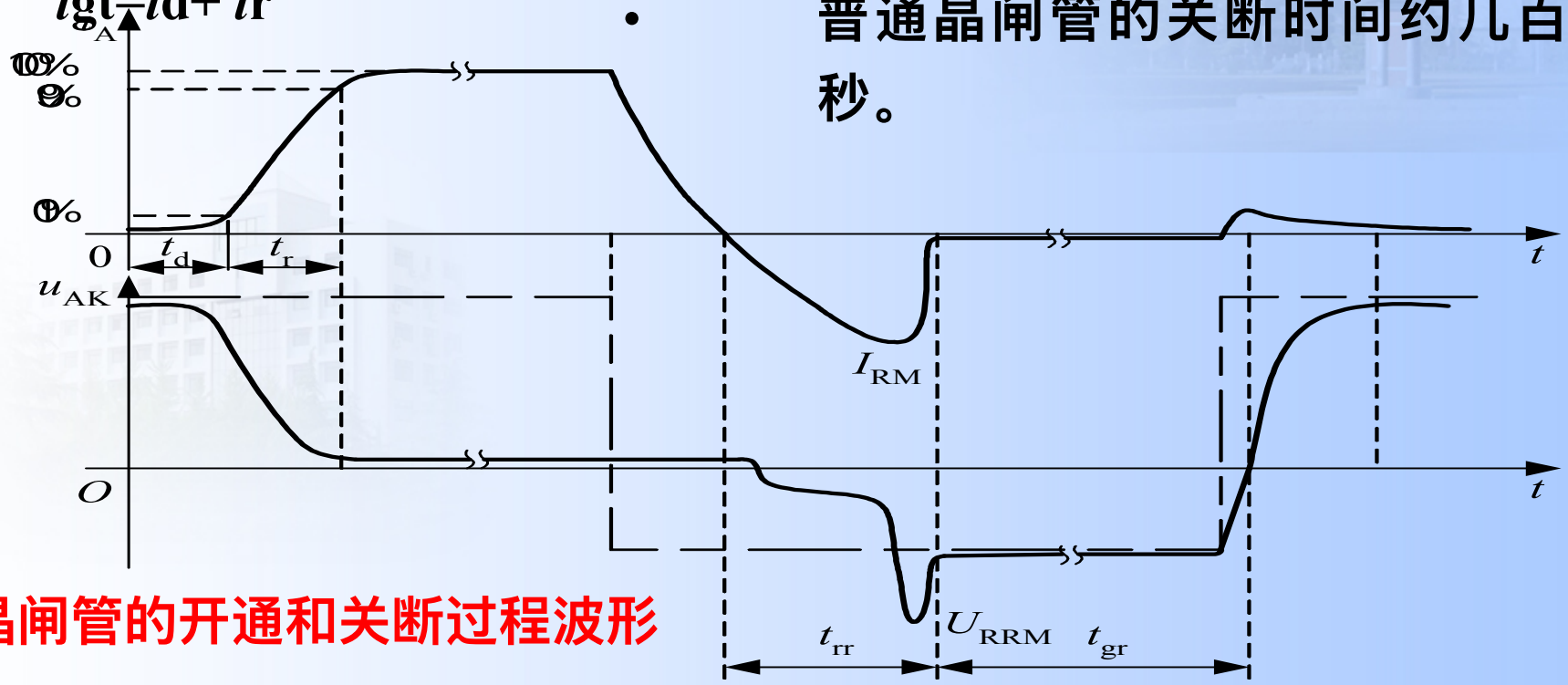

晶闸管的开通和关断过程波形

1、SCR导通过程－SCR导通过程受导通面积逐渐扩大的影响，存在di/dt耐量的问题。

2、由于SCR也属于少子导电型器件，因此象二极管一样，也存在反向恢复问题。波形、引起的后果等都与二极管类似，包括短暂的短路状态（负向电流）、关断时间加长、引起反向恢复峰值电压、引起反向恢复峰值电流等。

3、由于SCR存在du/dt触发的可能性，因此SCR在关断状态下存在du/dt耐量的问题。与di/dt耐量取决于SCR本身不同，du/dt耐量还与门极驱动电路有关。

5 The family of thyristor

- Phase-Controlled thyristor (SCR) **相控晶闸管**

  tq=50~100 μs

- Fast switching thyristor (SCR) **快速晶闸管**

  have small turn-off time tq =5~50 μs.

- Light-activated thyristor (LASCR)**光控晶闸管**

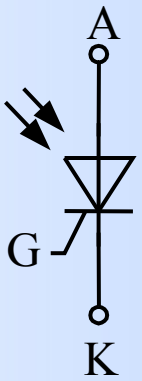

- Bidirectional phase-control thyristor (BCT)双向晶闸管 or Triode AC switch—TRIAC

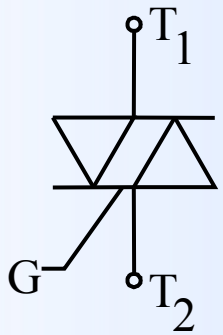

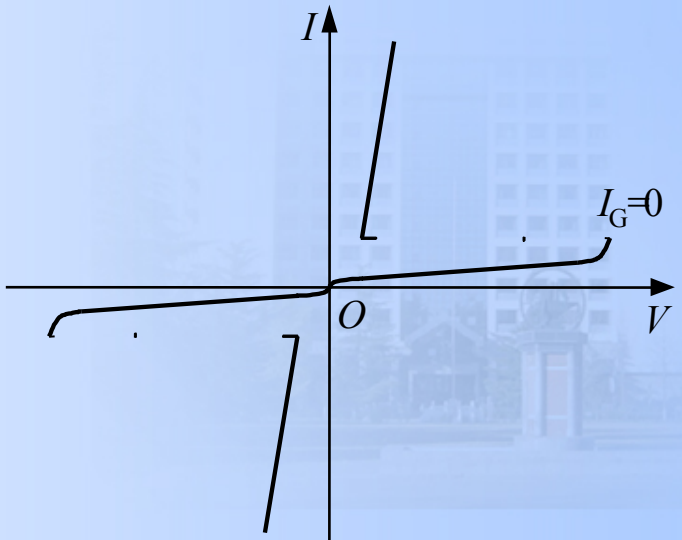

- Reverse-conducting thyristor (RCT)逆导型晶闸管

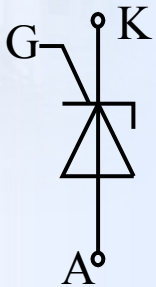

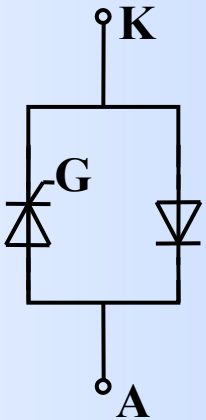

本节小结

本节要求

理解晶闸管(SCR) MOSFET) 器件的工作原理、特点、主要参数的含义；掌握晶闸管额定电流的计算方法；理解电路中dv/dt、di/dt参数对晶闸管器件的影响。

本节小结

说明：① 晶闸管额定电流计算

Average on-state current---IT(AV)

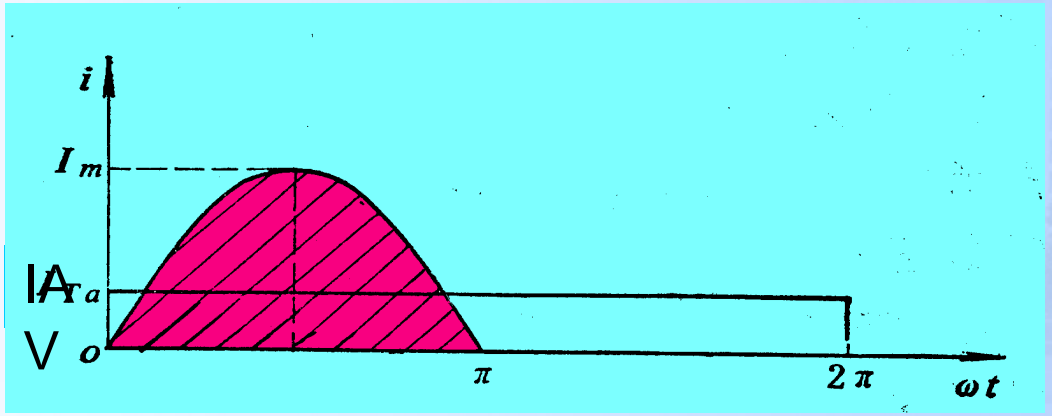

$$I_{AV} = \frac{1}{2\pi}\int_0^{\pi} I_m \sin\omega t d\omega t = \frac{I_m}{\pi}$$

$$rms \qquad I = \sqrt{\frac{1}{2\pi}\int_0^{\pi} (I_m \sin\omega t)^2 d(\omega t)} = \frac{I_m}{2}$$

$$I_{AV} = \frac{2}{\pi} I = \frac{I}{1.57}$$

本节小结

☆ How to Calculate the rated current value of the SCR

① Find the rms value of the current through a SCR.

$$I = \sqrt{\frac{1}{\beta - \alpha}\int_{\alpha}^{\beta} i^2(\omega t)d(\omega t)}$$

② Find the average on state current through a SCR.

$$I_{AV} = (1.5 \sim 2)\frac{I}{1.57}$$

本节小结

说明：② 晶闸管基本概念

- *Holding current (维持电流)*--IH (the minimum anode current to main the thyristor in the on-state). ☆
  junction temperature ↑→IH↓
- *Latching current (擎住电流)*--IL (the minimum anode current required to maintain the thyristor in the on-state immediately after a thyristor has been turned on and the gate signal has been removed). ☆
  for the same thyristor: IL≈(2~4) IH

The forward anode current of a thyristor must be more than its latching current to latch into the conduction state; otherwise, the device reverts to the blocking condition as the anode to cathode voltage falls.

本节小结

说明：③ 晶闸管基本概念

- di/dt must be less than the rated value. If di/dt exceeds the rated value, the device may be damaged.
- Rate of rise of the voltage at turn-off---dv/dt

If a thyristor is in a blocking state, a rapidly rising voltage applied across the device can cause high current flow through its internal junction capacitor. This current may be high enough to damage the device.

Thus, the applied dv/dt must be less than the rated value.

Review questions

2.1 what is the v-i characteristic of thyristors?

2.2 what is an off-state condition of thyristors?

2.3 what is an on-state condition of thyristors?

2.4 what is a latching current of thyristors?

2.5 what is a holding current of thyristors?